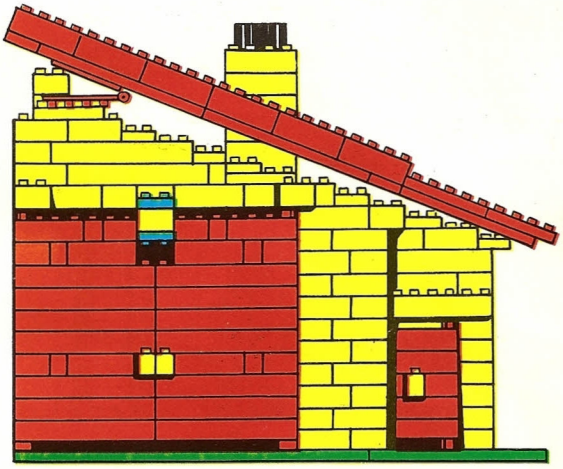

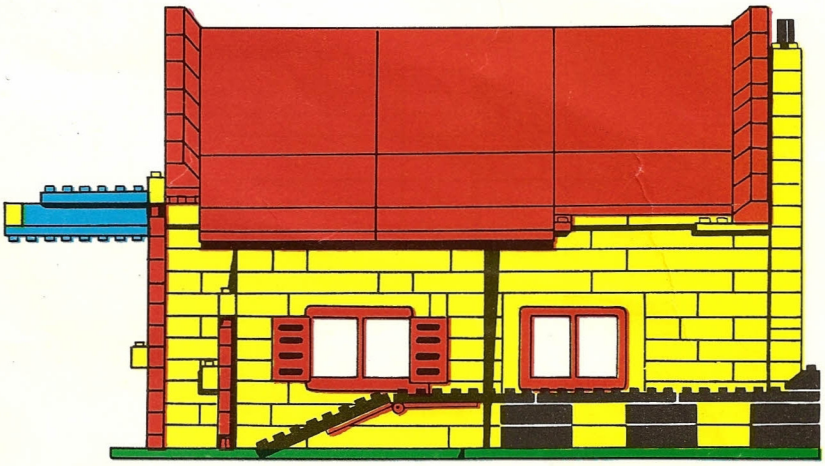

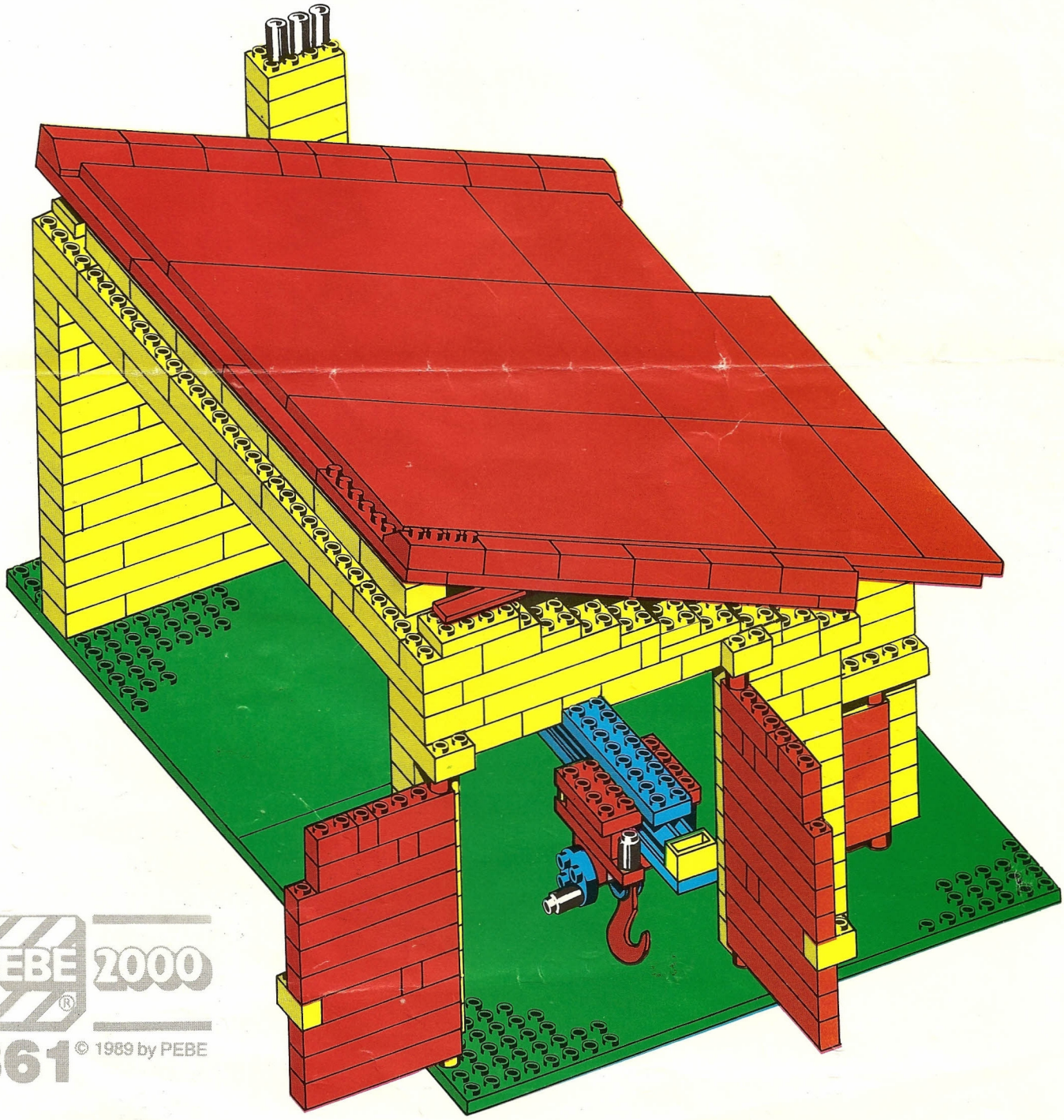

PEBE 2000

861 © 1989 by PEBE

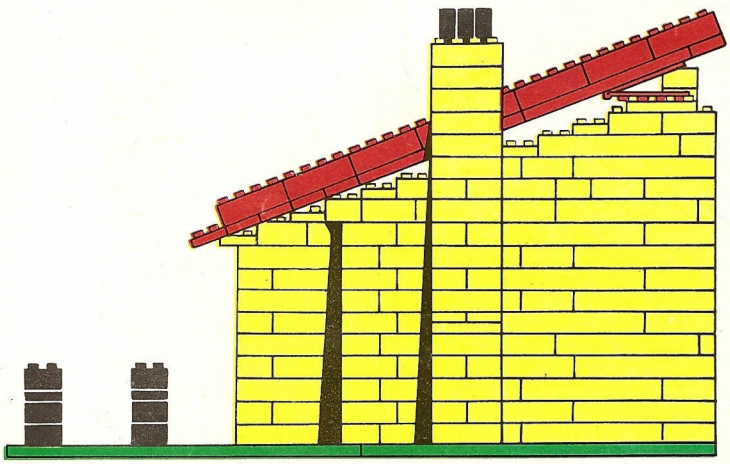

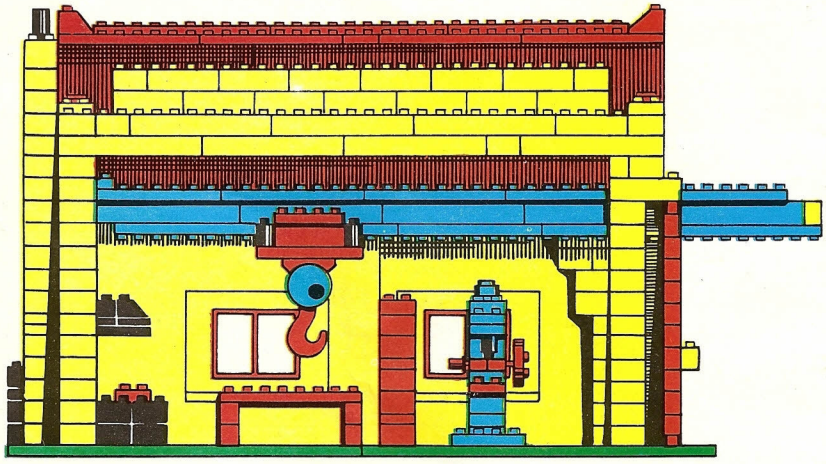

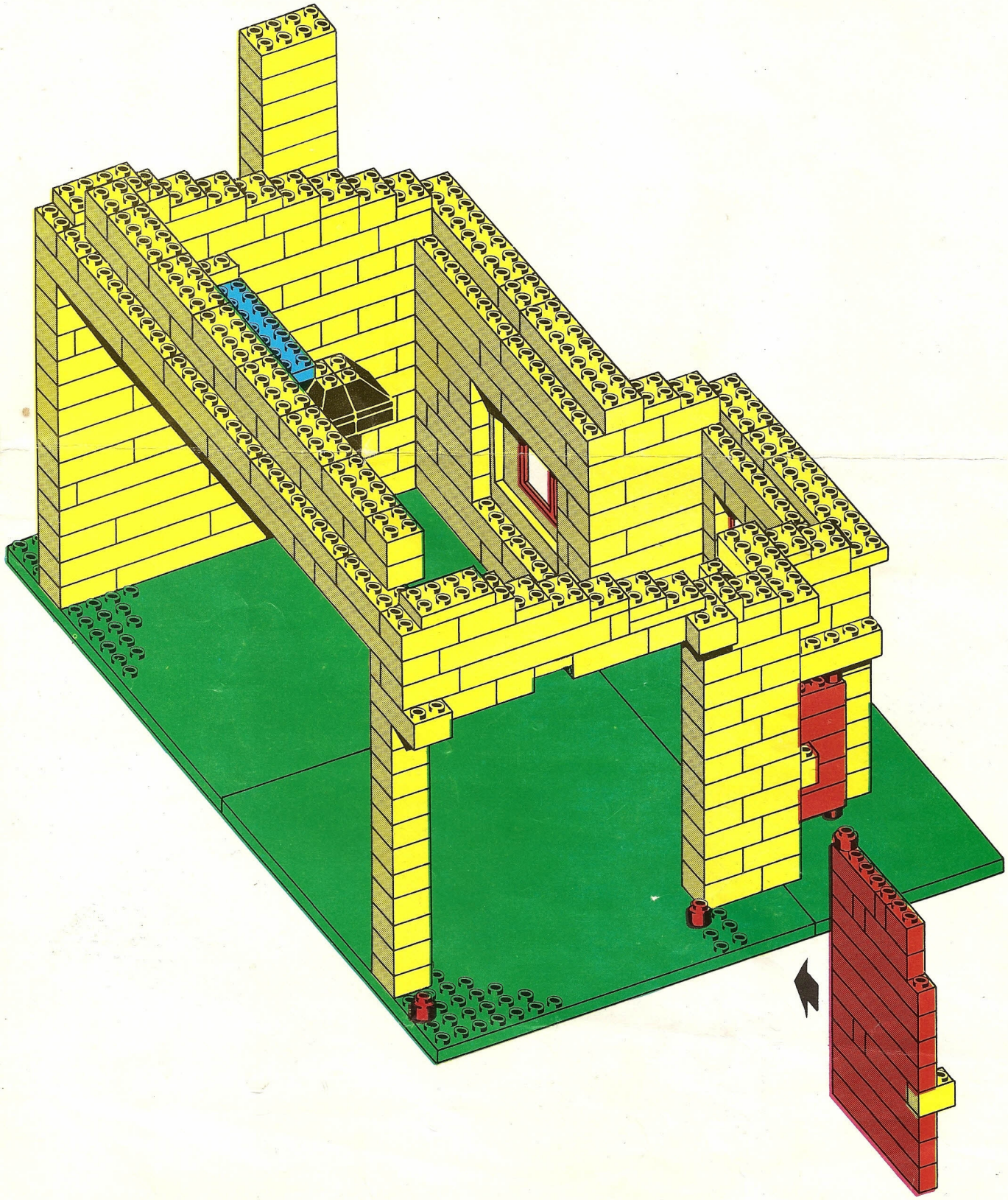

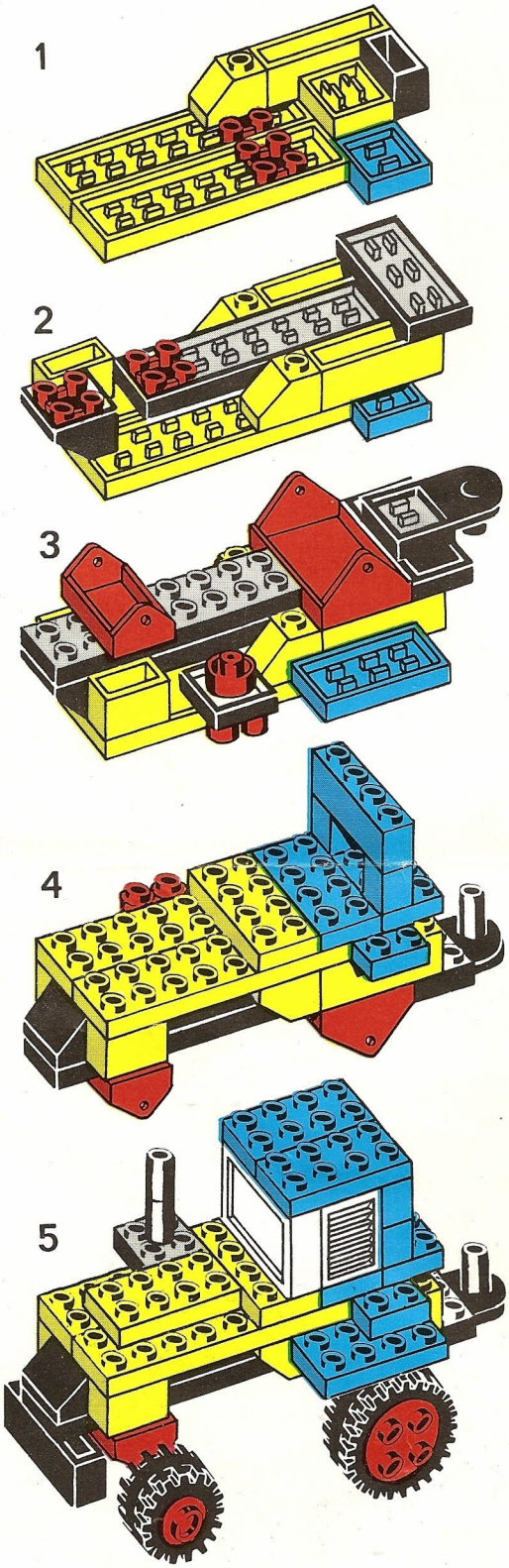
1
2
3
4
5

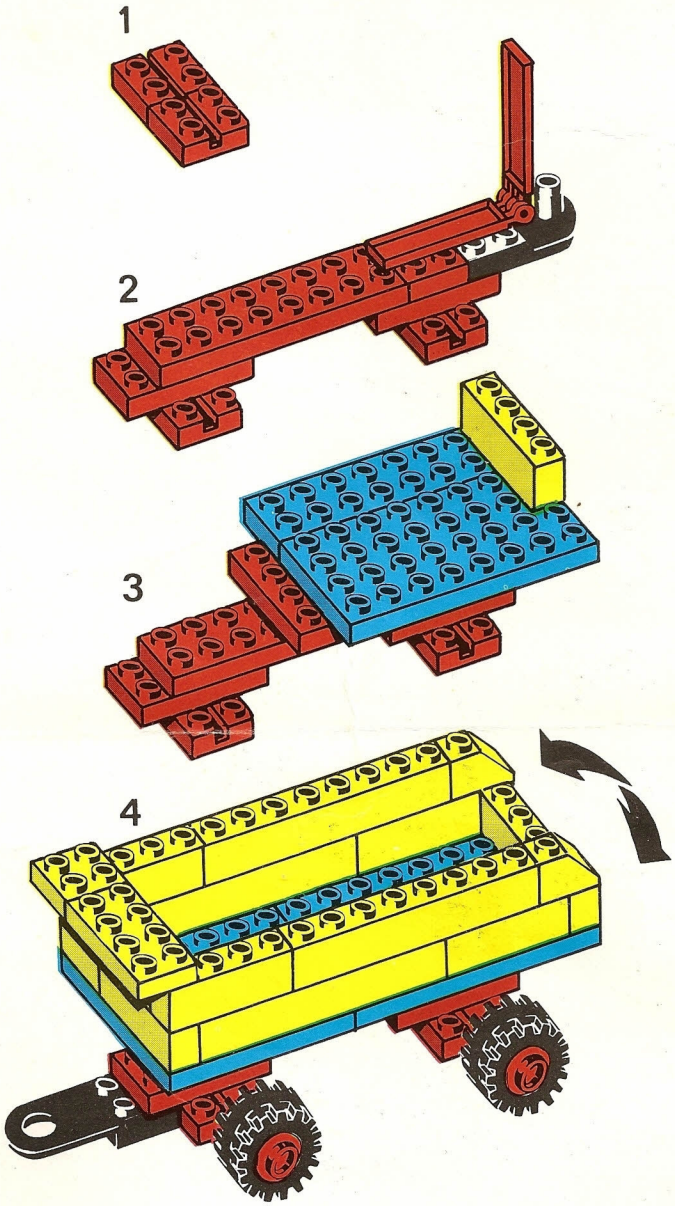
1
2
3
4

1

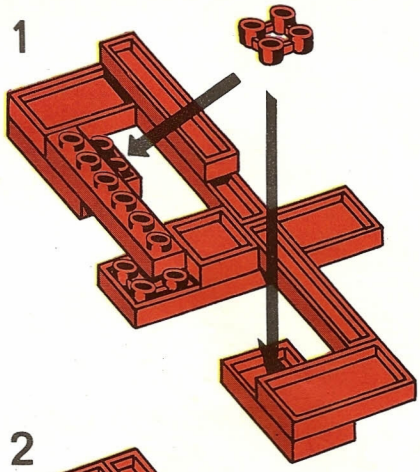

2

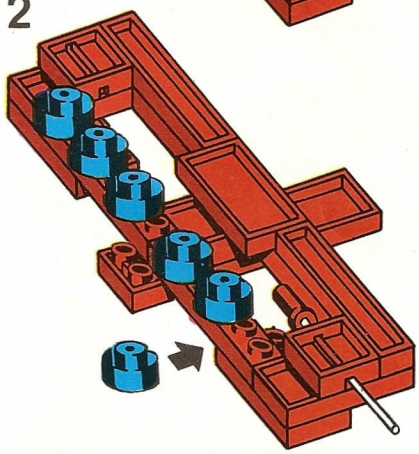

1

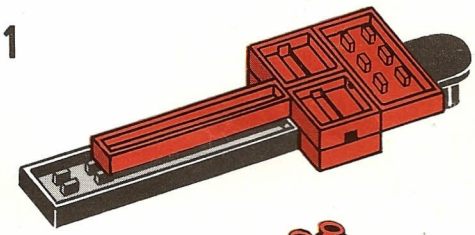

2

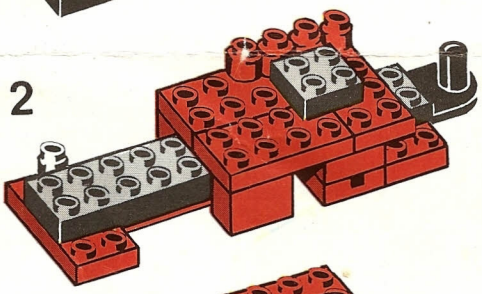

3

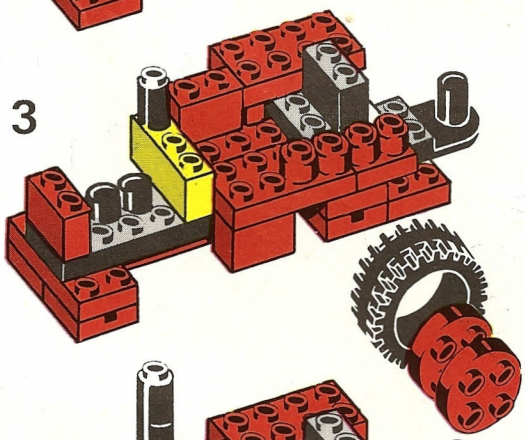

4

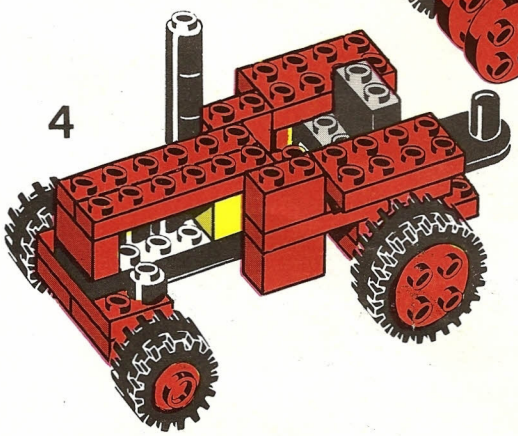

3

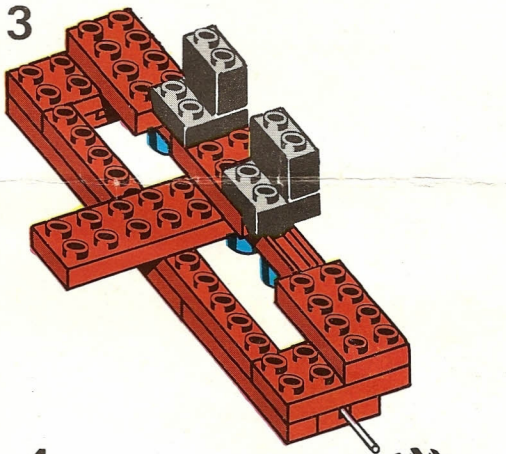

4

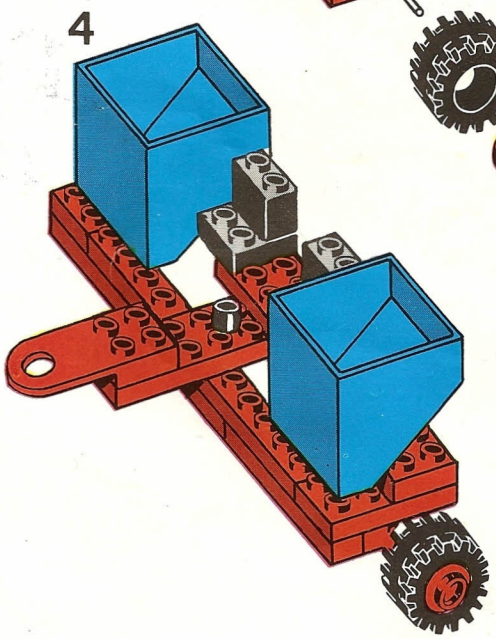

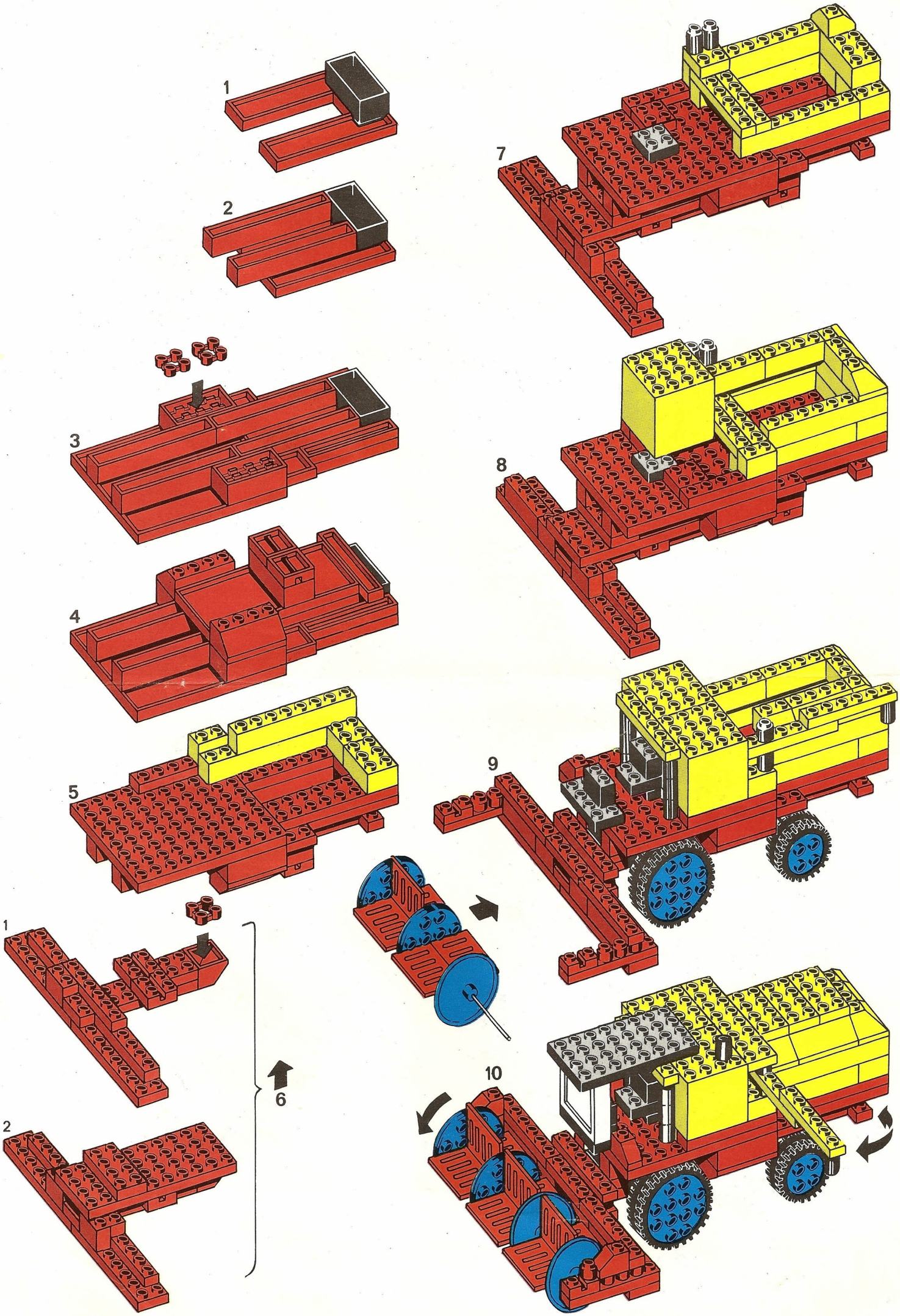
1
2
3
4
5
7
8
9
10
1
2
6

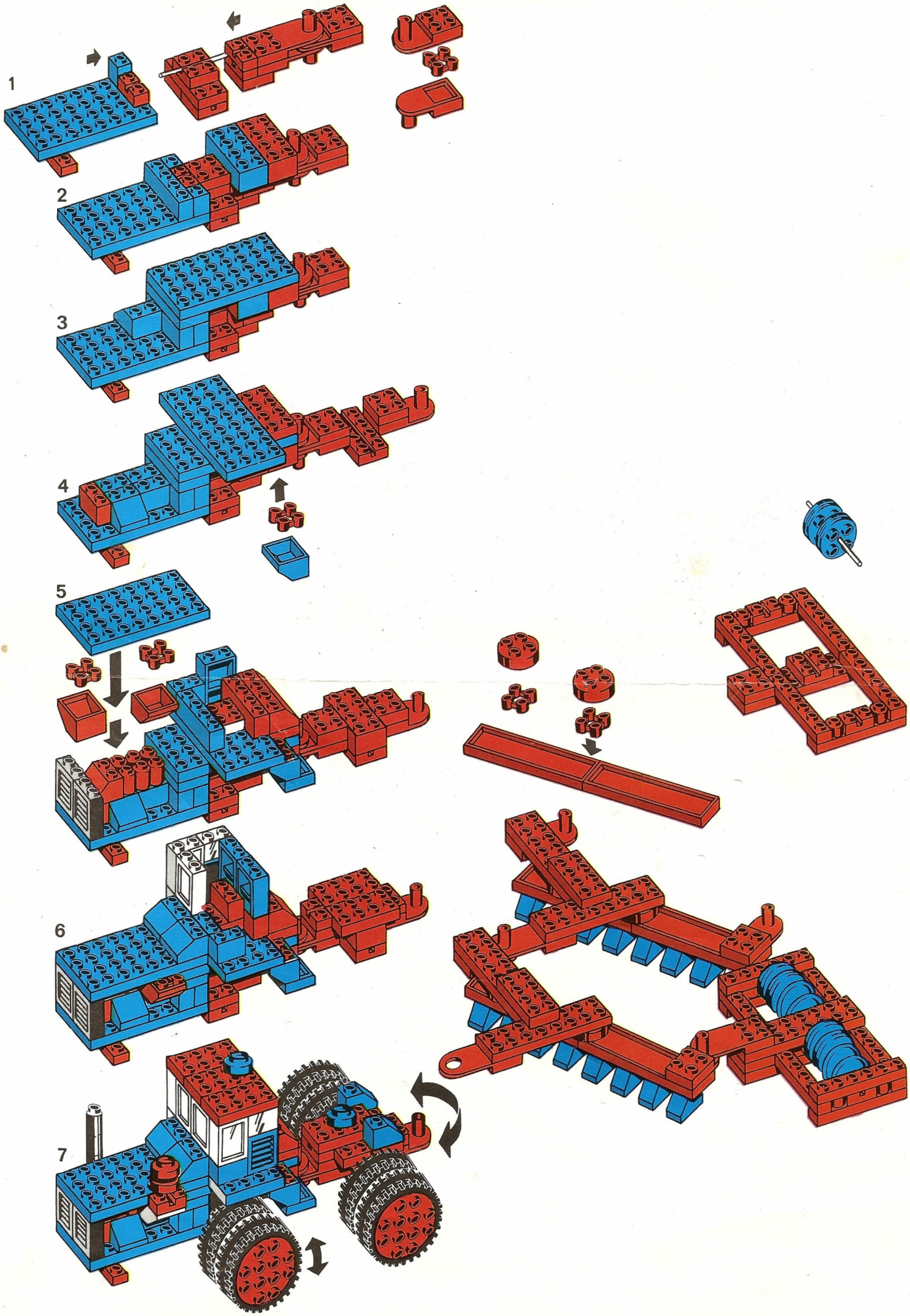
1
2
3
4
5
6
7